IP-Enable Your Products Quickly and Easily

Turn-key ST 2110, ST 2059, and NMOS FPGA Cores

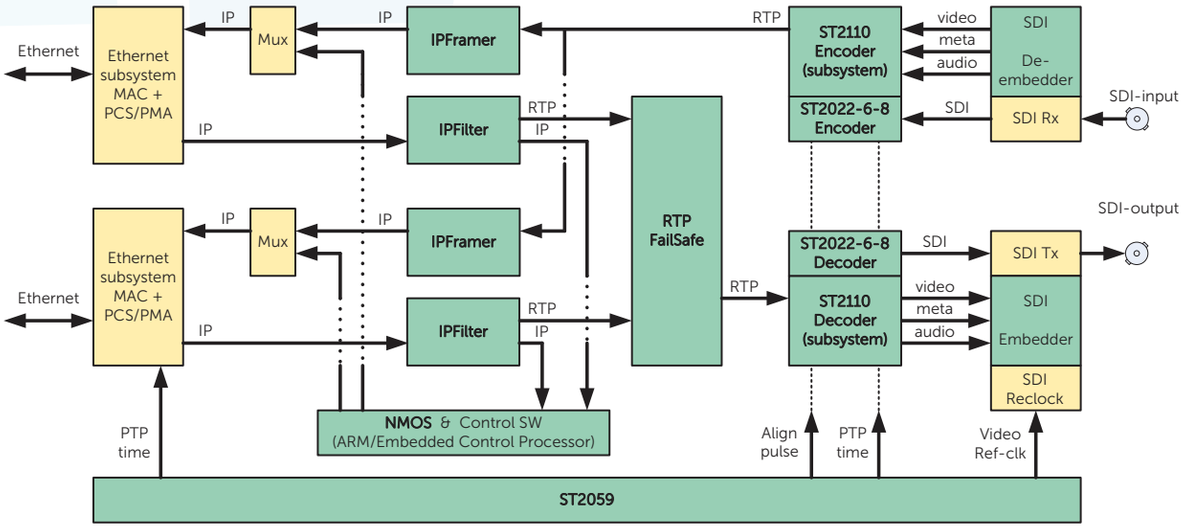

Included Reference Design

Nextera and Adeas have teamed up to provide a complete solution for standards based AV over IP. Our fully modular solution consists of FPGA cores, drivers, daemons, control software, and an intuitive web GUI. Our end-to-end reference design enables turn-key development and design services are available to accelerate time to market.

Available IP Cores

- SMPTE ST 2110 Encoder / Decoder
  -10, -20, -21, -22, -30, -31, -40
- SMPTE ST 2059 Time Synchronization
- IP Framer and Filter
- RTP Failsafe (ST 2022-7)
- SMPTE ST 2022-8 companion core
- SDI Bridge (Audio/ANC Embed/De-embed)
- Frame Synchronizer - Production ready
- NMOS Control Software
  IS-04, IS-05, IS-07, IS-08, IS-09, IS-11, IS-13
- Secure NMOS with HTTPS and TLS

Applications

- SDI-IP gateways
- PCIe adapters
- ST 2022-6/8 to ST 2110 Transcoders
- Media Servers
- Cameras
- Displays

Network Speeds

Network Speed Independent

- 1 Gb/s, 10Gb/s, 25Gb/s, 100Gb/s

Video Specifications

Format and Frame Rate Independent

- RGB, YCrCb, Key
- 4:4:4, 4:2:2, 4:2:0
- 8, 10, 12, 16 bits per component

Resolution Independent

- Uncompressed & Compressed
- HD, 3G, 4K, 8K

Audio Specifications

- Sample Rate Independent
- Programmable packet time
- PCM: L16, L20, L24, AES3

RTL & Software

- RTL and SW drivers, daemons included
- Modular & Configurable
- Demo design included

Interoperability

- Fully tested at numerous official interops and test events (JT-NM Tested), earning all possible "JT-NM Tested" badges

intel partner Titanium

adeas

Nextera Video

sales@nexteravideo.com
www.nexteravideo.com
+1 (650) 600-9686

IP-Enable Your Products Quickly and Easily

Turn-key ST 2110, ST 2059, and NMOS FPGA Cores

Hardware RTL Cores

The following IP cores are designed in RTL and are controllable by included SW drivers and daemons. Our cores are available individually or as a pre-integrated bundle.

SMPTE ST 2110 Core

The ST 2110 IP core provides broadcast and professional AV equipment the ability to send and/or receive media over IP networks. It supports the following sub standards:

- ST 2110-10: System timing
- ST 2110-20: Uncompressed active video
- ST 2110-21: Traffic shaping
- ST 2110-22: Compressed video
- ST 2110-30: PCM digital audio
- ST 2110-31: AES3 transparent transport
- ST 2110-40: Ancillary data

The modularity and configurability allows an efficient implementation, using only the necessary RTL logic to minimize resources. Supports gateway and synthetic essence operation.

Benefits:

- Resolution independent (HD/4K/8K)
- Network speed independent (1G/10G/25G/100G)
- Reference designs included
- Small footprint (lowest FPGA resources)

SMPTE ST 2059 Time Synchronization

The ST 2059 IP core provides broadcast and professional AV equipment the ability to support the generation of deterministic timing signals for video and audio systems.

It supports timing and synchronization according to:

- ST 2059-1: Alignment of Signals to Epoch
- ST 2059-2: Profile for IEEE1588 PTP

Configurable to output multiple programmable reference clock and sync signals, supports the generation of HH:MM:SS:FF Time Code including drop frame, and is network speed independent.

Companion RTL Cores

RTP Fail-Safe (ST 2022-7)

This IP core provides seamless protection switching (hitless failover) using two Ethernet ports. One RTP stream is reconstructed out of two input RTP streams. Able to cope with Ethernet jitter, latency differences between streams, and re-ordered packets.

IP Framer

This IP core provides the formatting of RTP packets into UDP/IP packets. It assembles and adds UDP, IP and MAC headers, calculates and inserts CRC checksums, and provides VLAN tag headers and specific MAC header commands.

IP Filter

This IP core filters incoming packets from an Ethernet MAC and distributes them to the appropriate channel. Programmable by SW control, it removes faulty packets and strips IP, VLAN and/or UDP headers from media channels.

SDI Bridge

Production-ready Audio/ANC embedder and de-embedder, works with AMD UHD-SDI Core or Intel SDI II Core

JPEG-XS Compressed Transport

TR-08/IPMX Compatible with Universal TX/RX option.

NMOS Control Software

Compatible with any IP Core, any OS, on any platform, the NMOS Software Core enables SMPTE ST 2110 based products to interoperate on a multi-vendor IP network.

Mandated by the JT-NM and EBU, NMOS enables devices to be truly ST 2110 compliant. The complete NMOS suite consists of the following:

- IS-04: Discovery and Registration
- IS-05: Connection Management
- IS-07: Event & Tally
- IS-08: Audio Channel Mapping
- IS-09: System Parameters
- IS-11: Stream Compatibility
- IS-13: Annotation & Labelling
- Secure NMOS (BCP-003-01)

intel partner Titanium

adeas

Nextera Video

sales@nexteravideo.com
www.nexteravideo.com
+1 (650) 600-9686